4Ways Wilkinson Power Divider/Combiner

AT-PD4-0226

REV A

Feature

2-26 GHz Broadband

Low Insertion Loss

Outstanding Phase and Amplitude Balance

Electrical Specifications -

Specifications guaranteed from -45 to +85°C, measured in a 50Ω system

Parameter	Frequency Range(GHz)	Min	Typ	Max	Unit
Normal Power Splitting	2-26GHz		6		dB
Normal Phase Shift			0		Degree
Amplitude Balance			+/-0.5		dB
Phase Balance			+/- 6		Degree
Insertion Loss			2	2.7	dB
VSWR			1.5	1.8	
Isolation			16		dB
CW Peak			20		W
Peak Power			3000		W
Weight			160		g
Dimension(L/W/H)		73X59X10			mm

Order Information

Part Number	Description
AT-PD4-0226	4Ways 2-26GHz Power Divider With SMA Female Connectors

Consult factory for other connectors option

Dimension

Unit: mm/Degree

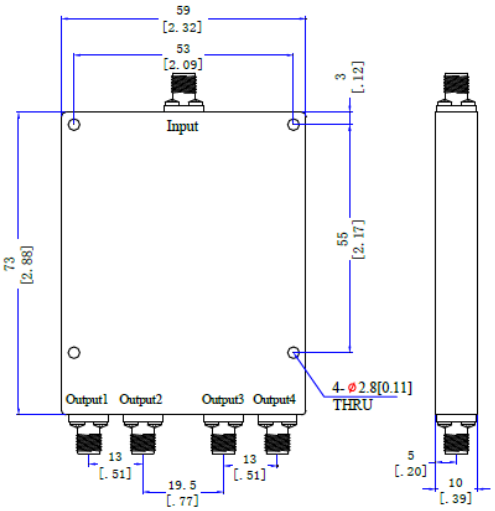

AT Microwave
RM1204,NO.2911,North Zhongshan RD, Putuo District , Shanghai ,China, 200063
Tel:+8621-5291 8556 Email:sales@atmicrowave.com www.atmicrowave.com

AT-PD4-0226

Loss & Amplitude

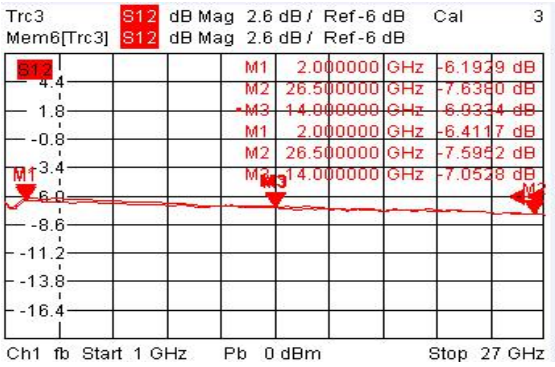

Input VSWR

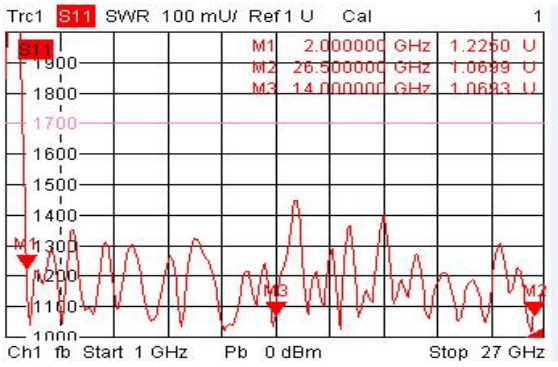

Output VSWR

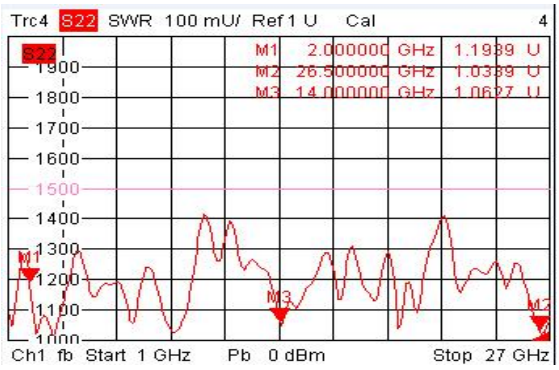

Isolation

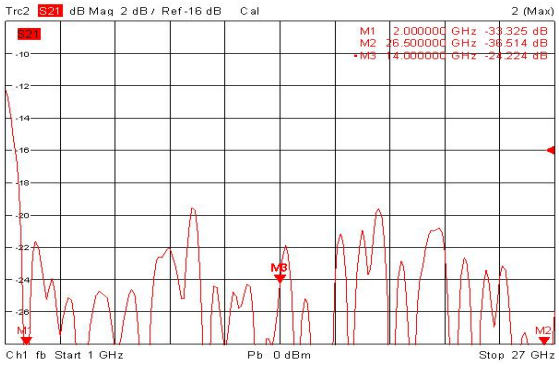

Phase Unbalance

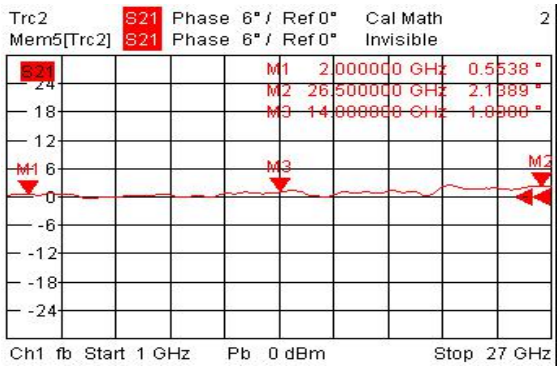

AT Microwave
RM1204,NO.2911,North Zhongshan RD, Putuo District , Shanghai ,China, 200063
Tel:+8621-5291 8556 Email:sales@atmicrowave.com www.atmicrowave.com