AT-MIX-5075H

Full V Band Balance Mixer

2023-3-13

50-75GHz Balance Mixer WR-15

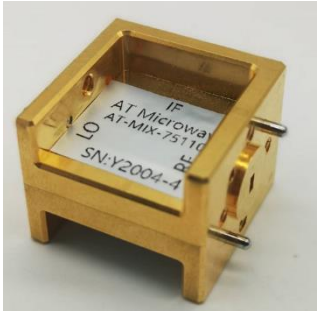

Description:

AT-MIX-5075H is an up and down balance mixer covering E band based on GaAs MMIC technology. IF input is balanced and can range from DC to 26.5GHz with 2.92mm Female connector

.

LO/RF frequency range is 50-75GHz with WR-15 waveguide. LO-RF isolation features -28dBc typical. AT-AM4-5075-13GL or AT-AM6-5766-13 can be used as a LO Driver.

More information, please visit www.atmicrowave.com

Feature

- ✓ RF/LO: 50-75GHz
- ✓ IF: DC-26.5GHz
- ✓ Low Conversion Loss
- ✓ Low LO power requirement
- ✓ High RF/LO Isolation

Application

- ✓ V band Imaging
- ✓ Automotive Test
- ✓ Test Equipment
- ✓ ROF (RF Over Fiber)
- ✓ Radar System

Electrical Specifications

Parameter	Min	Typical	Max
RF Frequency		50-75GHz	
LO Frequency		50-75GHz	
IF Range		DC-26.5GHz	
Conversion Loss (IF=100MHz)		-8dB	-13
LO Driver	+10	+13dBm	+16
LO-RF Isolation		-30dBc	
LO-IF Isolation		-20dBc	
P1dB		+7dBm	
Bias		NO	
Spec Temp		25C	

Shanghai AT Microwave Limited

Tel:021-6229 1233 Email:sales@atmicrowave.com www.atmicrowave.com

AT-MIX-5075H

Full V Band Balance Mixer

Mechanical Information

Item	Description
RF Port	WR-15
LO Port	WR-15
IF Port	2.92mm Female
Case Material	Copper
Finish	Gold Plated
Weight	30g
Size:	See outline

Absolute Maximum Ratings Table

Parameter	**Value**
IF Port Power	+10dBm
RF Port Power	+10dBm
LO Port Power	+18dBm
Operating Temperature	0 to +50C
Storage Temperature	-45 to +85C

Notes:

1. Datasheet may be changed according to update of MMIC, Raw materials , process, and so on.
2. This data is only for reference, not for guaranteed specifications.
3. Please contact AT Microwave team to make sure you have the most current data.

Down-Convertor Test

LO=+13dBm, RF-LO=100MHz, Down-convertor test, 25C

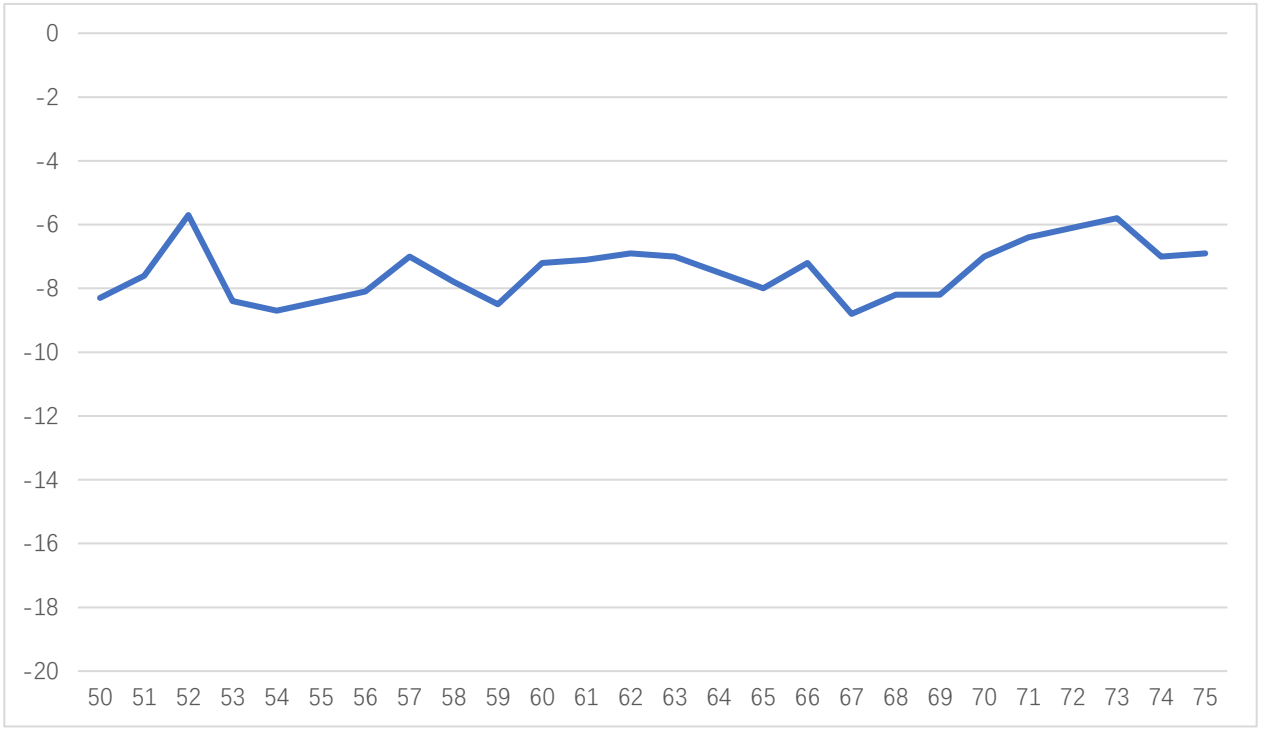

Conversion Loss vs Frequency

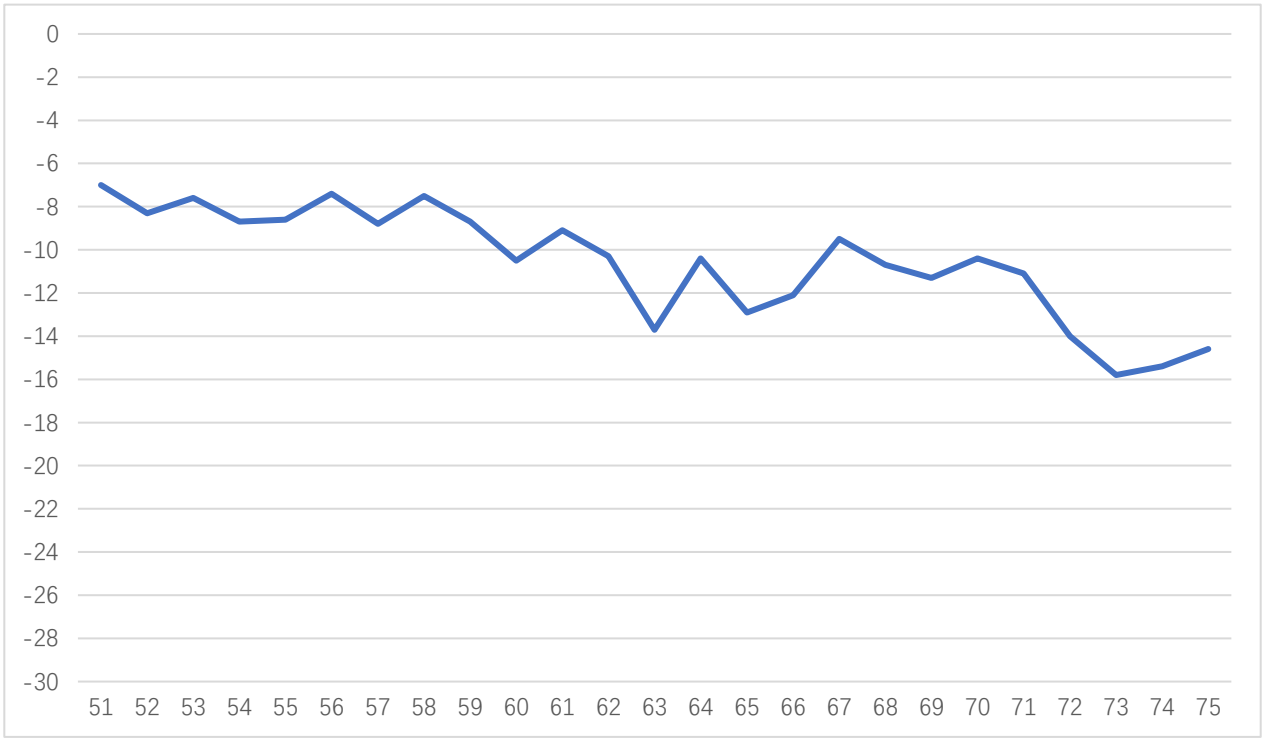

IF Response vs Frequency, LO=50GHz

Shanghai AT Microwave Limited
Tel:021-6229 1233 Email:sales@atmicrowave.com www.atmicrowave.com

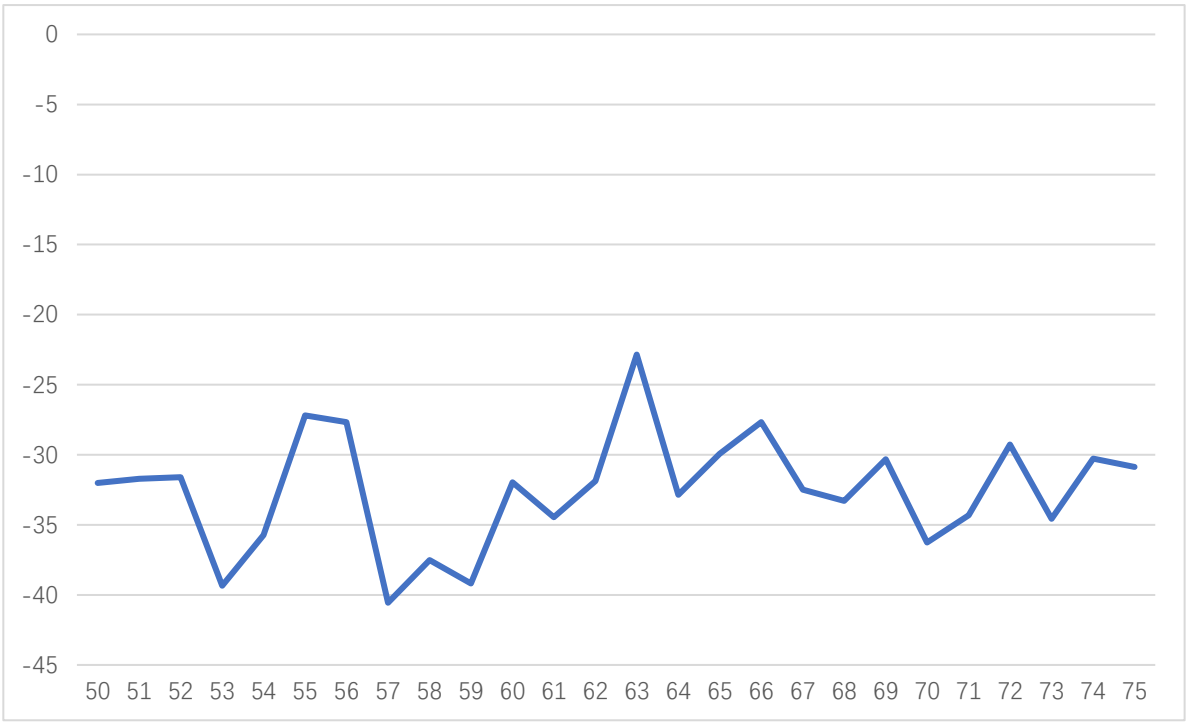

LO/RF isolation, IF=1GHz, LO=+13dBm

Application Note

Mixer is a three port component with RF, LO and IF ports. Normally, a mixer can be used both up and down converter application. Take up converter for example:

General Balance Mixer

For general balance mixer, RF=LO +/- IF. There will be both high end LO+IF and Low End LO-IF.
Take for example, IF=2GHz, LO=60GHz, so there will be 58GHz and 62GHz at RF port with same power level.

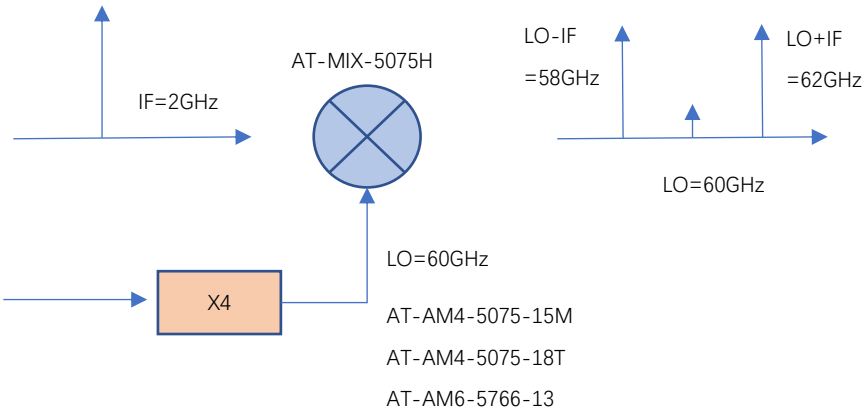

Figure A: General Balance Mixer with Both High and Low Side Output

IQ Mixer used as side suppression Mixer

When IF=2GHz, 90 degree hybrid is used at IF port, when IF applies to Input 1 Port of hybrid, you will have high end frequency RF=LO+IF=62GHz, while have side suppression (say -25dBc) at Low end frequency 58GHz. When you need low end frequency 58GHz, and make side suppression for high end frequency 62GHz, just applies IF to Input 2 of the hybrid.

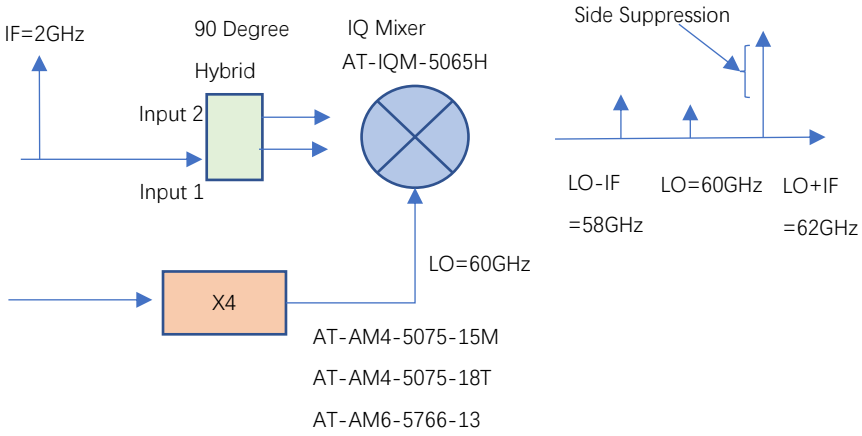

Figure B: IQ Mixer works as side suppression mixer

AT-MIX-5075H

Full V Band Balance Mixer

Dimension (Unit: mm)

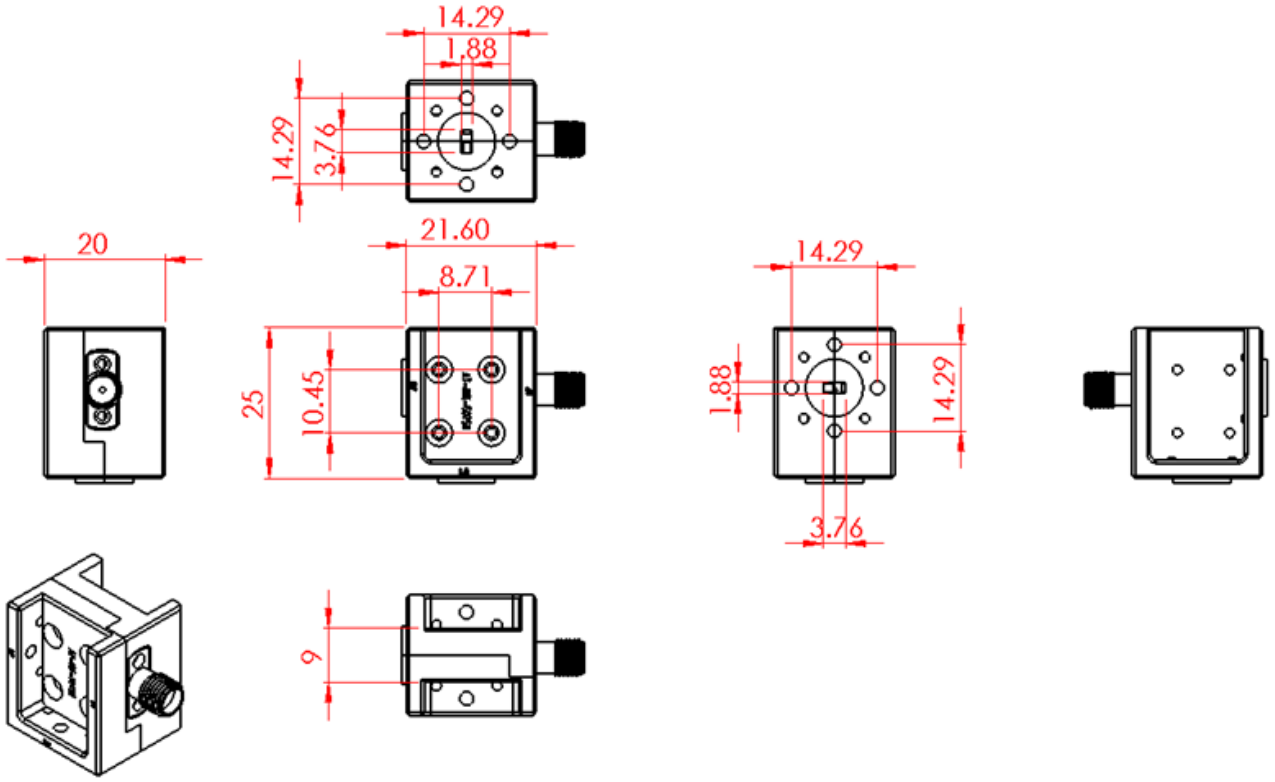

Shanghai AT Microwave Limited

Tel:021-6229 1233 Email:sales@atmicrowave.com www.atmicrowave.com