AT-HPF-60-12:
60GHz High-Pass Filter，WR-12

Product Overview

AT Microwave offers high performance band waveguide band-pass filter from 26.5-260GHz. Other frequency bands and rejection requirement can provide according to request.

Based on our excellent design work, precise machine tolerance and outstanding quality plating, we can provide band pass filter with low insertion loss, good return loss and high rejection at the same time.

More information, please visit www.atmicrowave.com

Advantages

- ✓ Low Insertion Loss
- ✓ Good Return Loss
- ✓ High Stop Band Suppression
- ✓ Sharp Roll-Off

Application

- ✓ Automotive Radar Test
- ✓ FOD (Foreigner Objects Debris)
- ✓ Test Equipment
- ✓ ROF (RF Over Fiber)
- ✓ Radar System

Key Features

Parameter	Min	Typical	Max
Passband Frequency		60-90GHz	
3dB Frequency		60GHz	
Insertion Loss		-1.0 dB	-2.5
Passband Return Loss	-10	-15 dB	
Rejection Frequency		DC-56GHz	
Rejection		-40dBc	
Waveguide Length		1.25inch	
Spec Temp		25C	

AT-HPF-60-12

E Band High Pass Filter, WR-12

Mechanical Information

Item	Description
Input Port	WR-12, UG-387/U Flange with anti-cocking Flange
Output Port	WR-12, UG-387/U Flange with anti-cocking Flange
Case Material	Brass
Finish	Gold Plated
Weight	35g
Size:	See Dimension

Absolute Maximum Ratings Table

Parameter	Value
Operating Temperature	-40 to +85C
Storage Temperature	-65 to +150C

Simulation Result

Note: Performance may vary from different units.

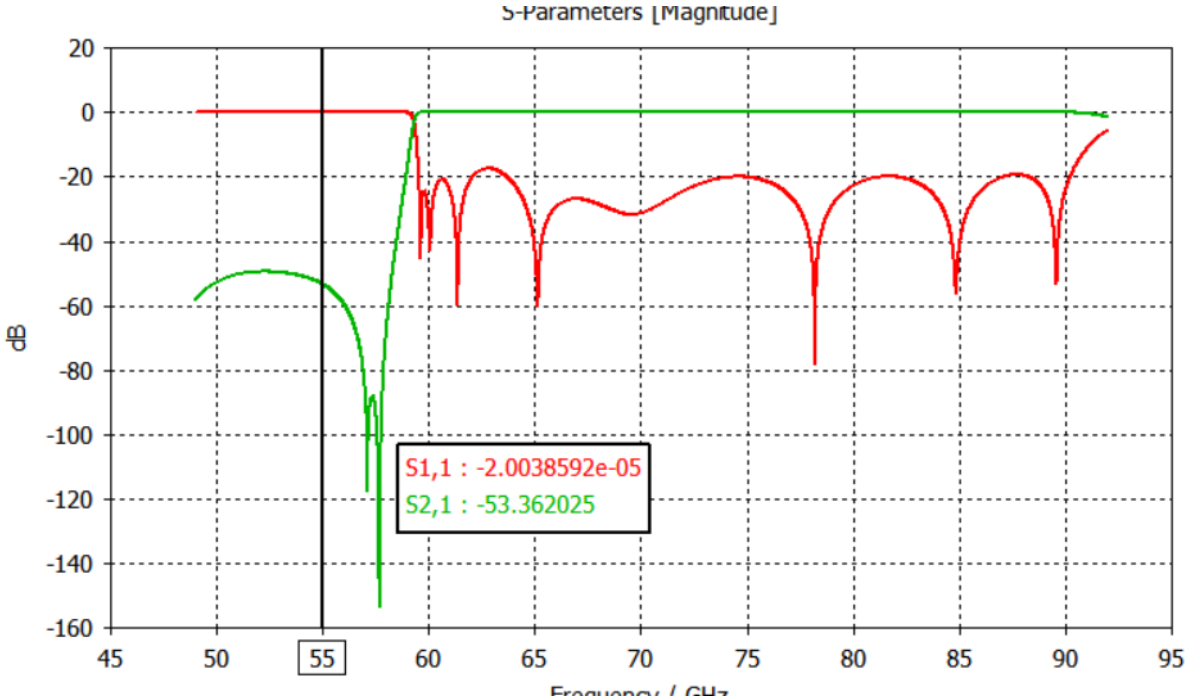

Shanghai AT Microwave Limited

Tel:021-6029 1233 Email:sales@atmicrowave.com www.atmicrowave.com

AT-HPF-60-12

E Band High Pass Filter, WR-12

Dimension(mm)

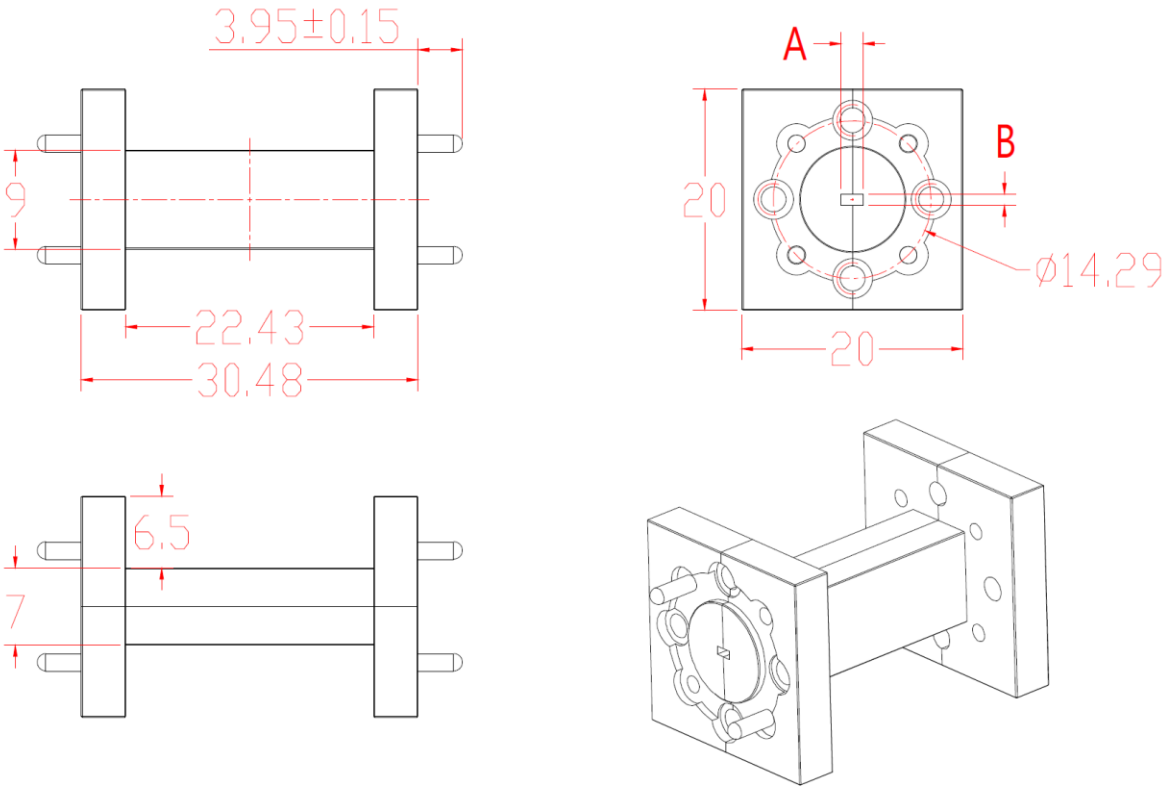

Waveguide	A x B (inch)	A x B (mm)
WR-15	0.148x0.074	37.59x18.80
WR-12	0.122x0.061	30.99x15.49
WR-10	0.100x0.050	25.40x12.70
WR-08	0.080x0.040	20.32x10.16
WR-06	0.065x0.032	16.51x8.25

Shanghai AT Microwave Limited

Tel:021-6029 1233 Email:sales@atmicrowave.com www.atmicrowave.com