AT-AM3-3234-20C

Active Multiplier x3, 32-34GHz Pout=+20dBm

Active X3 Multiplier, 32-34GHz High Power

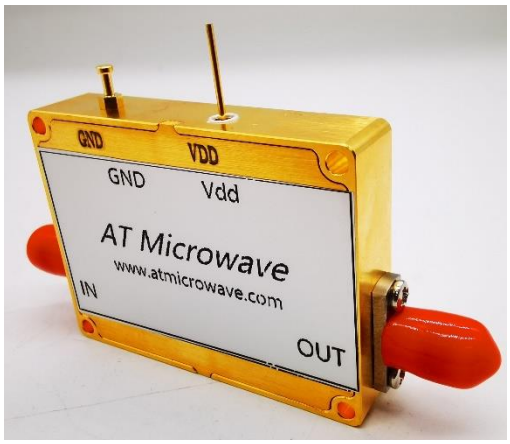

Description:

AT-AM3-3234-20C is a x3 broadband frequency multiplier. The multiplier has an input frequency of 8-11.5GHz with a typical output +20dBm from 32-34.5GHz.

The integrated input and output buffers deliver high output power at a low drive level. The multiplier also has a typical harmonic suppression. The input port is SMA female, and the output is 2.92mm Female. Other port configurations are available under different requirement.

More information, please visit www.atmicrowave.com

Feature

- ✓ Frequency: 32-34.5GHz
- ✓ Pout: +20dBm typical
- ✓ Input: 8-11.5GHz
- ✓ Low Harmonics

Application

- ✓ 5G Communication
- ✓ Test Equipment
- ✓ ROF (RF Over Fiber)
- ✓ Radar System

Electronical Specifications:

Parameter	Min	Typical	Max
Input Frequency	8GHz		11.5GHz
Input Power	+3	+5dBm	+10
Multiplier Factor		X3	
Output Frequency	32GHz		34.5GHz
Output Power		+20dBm	
X2/X3 Harmonic Suppression	-15	-25dBc	
Drain Voltage	+5.5V	+8V	+12V
Current		0.6A	
Spec Temp		25C	

Shanghai AT Microwave Limited

Tel:021-6229 1233 Email:sales@atmicrowave.com www.atmicrowave.com

Mechanical Information

Item	Description
Input Port	SMA Female
Output Port	2.92mm Female
Case Material	Copper
Finish	Gold Plated
Package Sealing	Epoxy Sealed
Weight (Without Heatsink)	80g
Size:	45x34x8.5mm

Absolute Maximum Ratings Table

Parameter	Value
Drain Supply	+13V
RF Input Power	+18dBm
Operating Temperature	-20 to +70C
Storage Temperature	-65 to +150C

Note: -40 to 85C operating Temp range is available according to request.

Notes:

- ✓ Datasheet may be changed according to update of MMIC, Raw materials , process, and so on.
- ✓ This data is only for reference, not for guaranteed specifications.
- ✓ Please contact AT Microwave team to make sure you have the most current data.
- ✓ Always pay attention to the temperature of the case, heatsink and fan are required if case temperature exceeds over 50C.

AT-AM3-3234-20C

Active Multiplier x3, 32-34GHz Pout=+20dBm

Dimension: (Unit:mm)

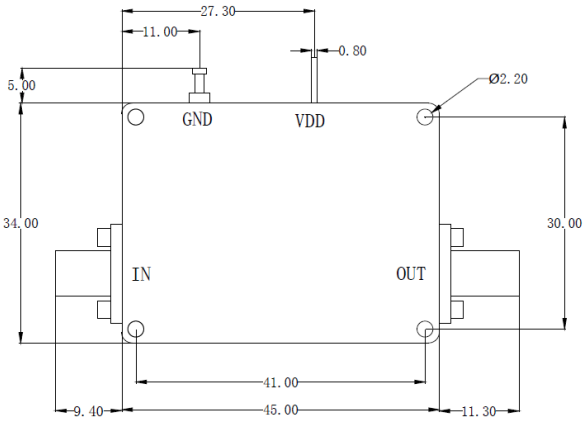

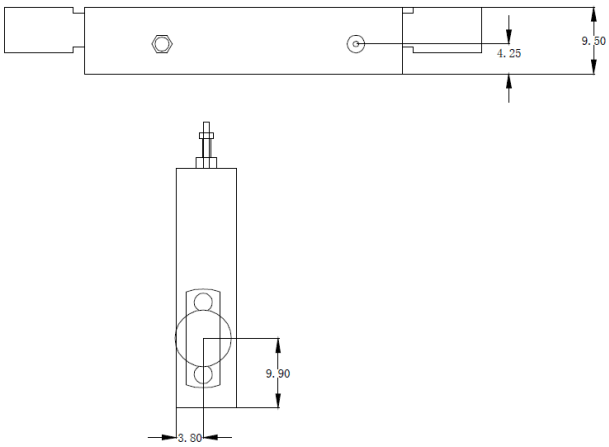

	<26.5GHz	<40GHz	<50GHz	<67GHz
Connector	SMA	2.92mm	2.4mm	1.85mm
Lenth of a	9.4mm	9.5mm	10.8mm	11.3mm

Note: Female Default. Contact with us for other types.

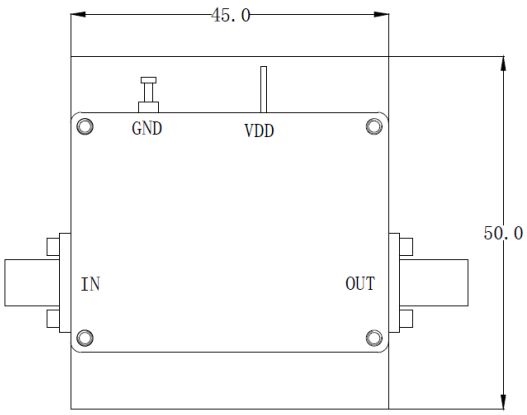

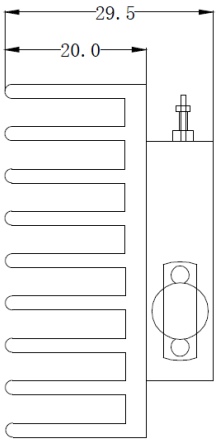

Including a small heatsink without Fan if output Power higher than +20dBm.

Customers can removed it or use their own heatsink according to actual situation.

Heat Sink Required During Operation if case Temp higher than 50C

Shanghai AT Microwave Limited

Tel:021-6229 1233 Email:sales@atmicrowave.com www.atmicrowave.com